E-Cap Series Chart
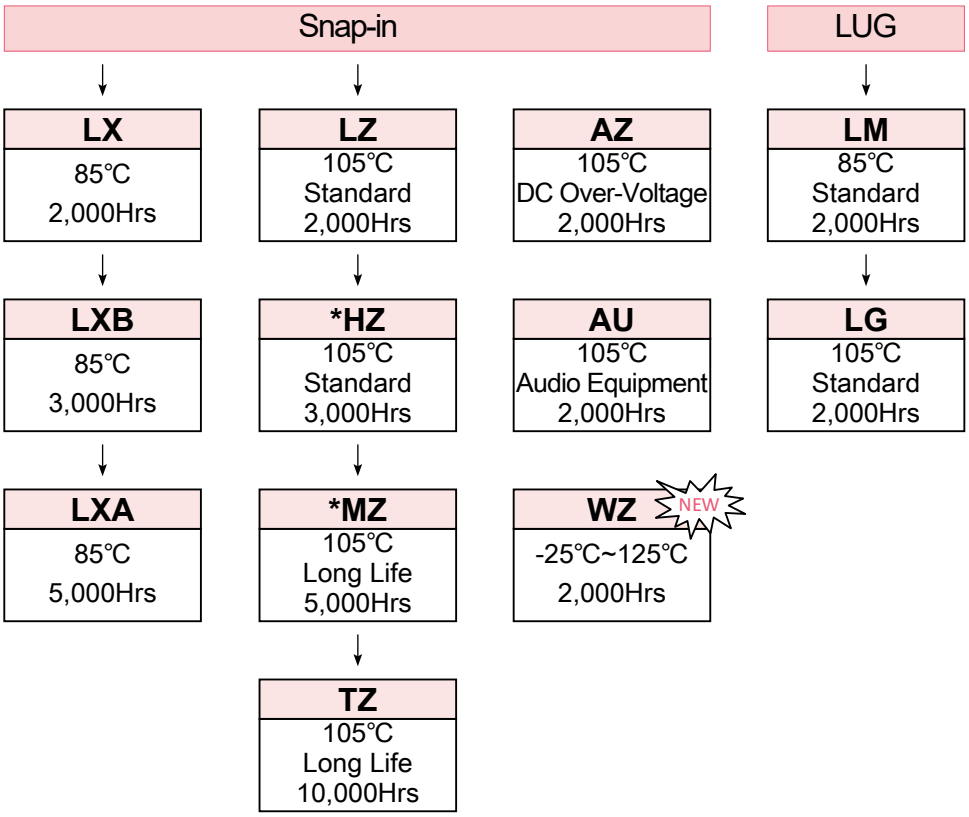
Note:AEC-Q200 marked with *