Series Chart
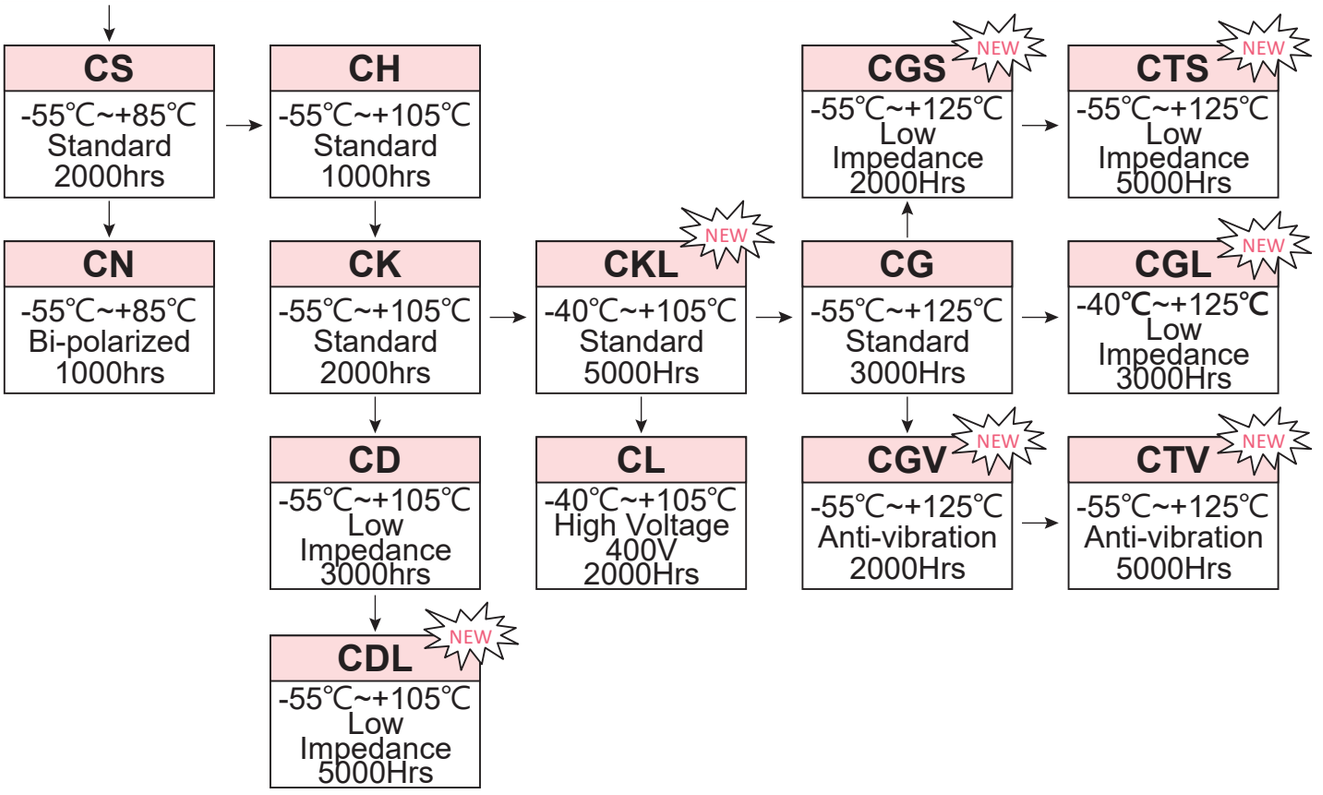
Vertical-Chip